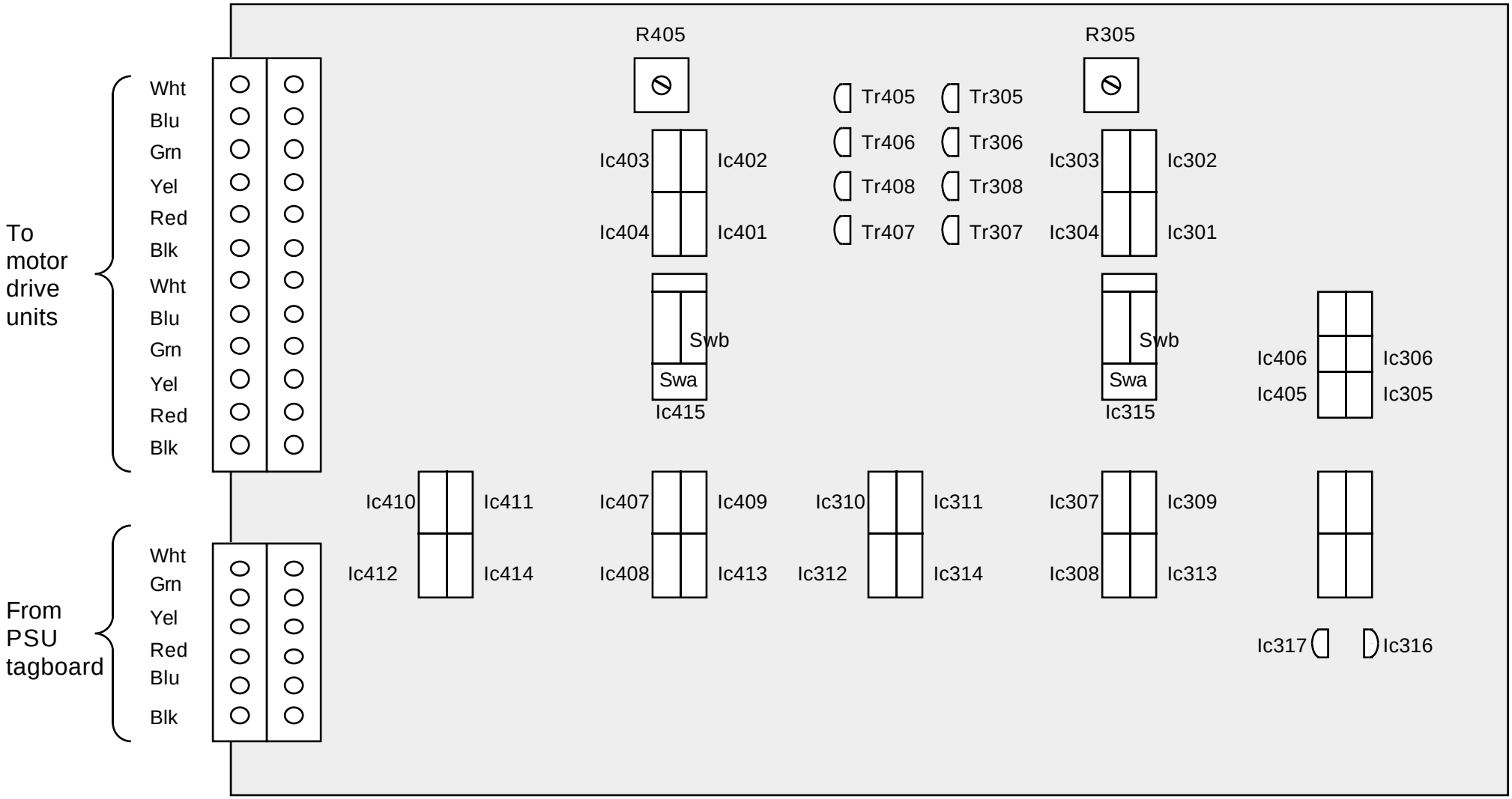

MOTOR DRIVE BOARD